2LS01712_(LEASED) COUNTRY HOUSE

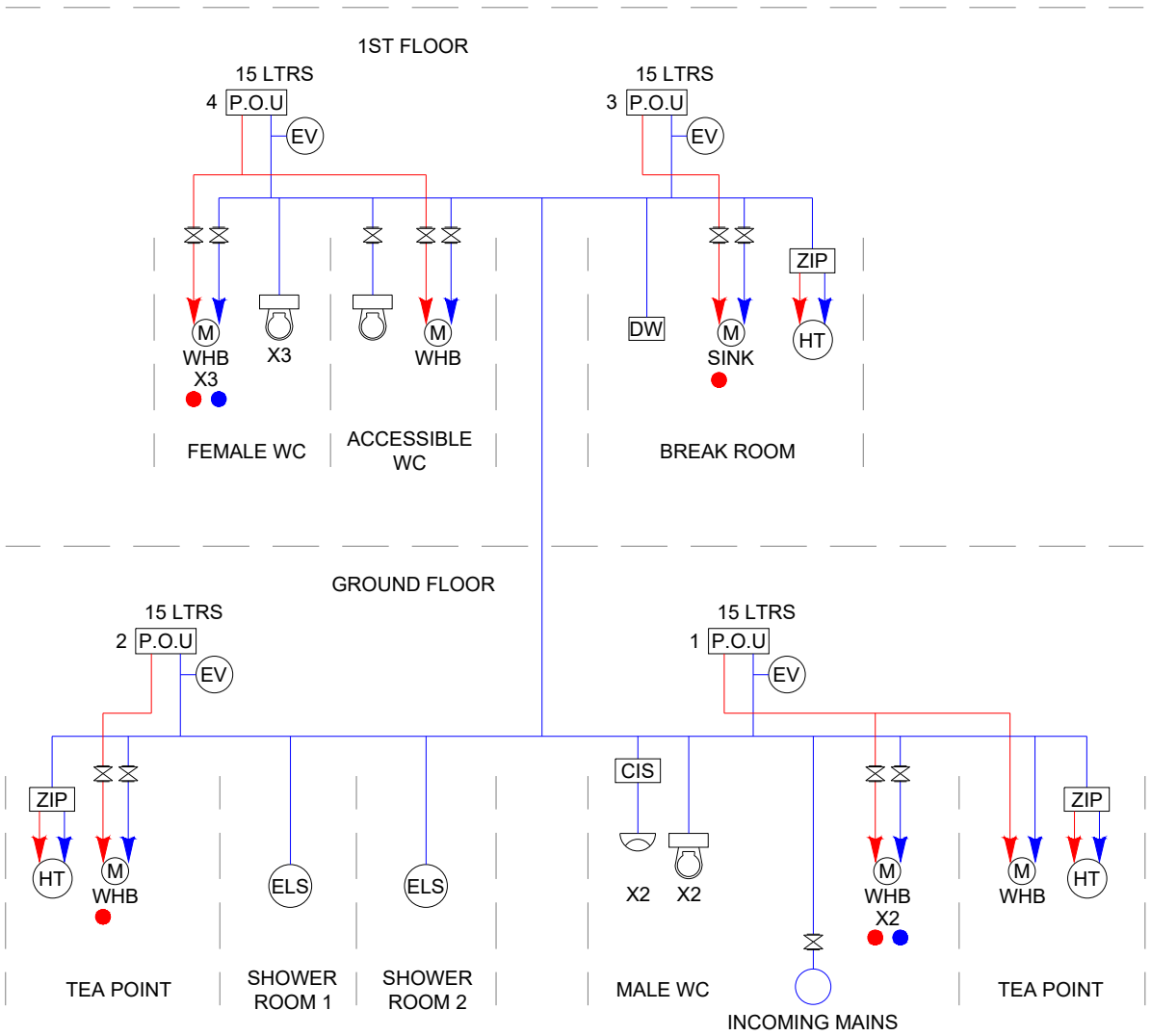

MAINS CWS SENTINELS

MAINS HWS SENTINELS

LEGEND

	MAINS FED CWS
	MAINS FED HWS
	MAINS/TANK FED WC'S
	MAINS/TANK FED URINAL'S
WHB	WASH HAND BASIN
M	MIXER TAP
	ISOLATION VALVES
DW	DISH WASHER
CIS	URINAL CISTERN
HT	HYDRO TAP
EV	EXPANSION VESSEL
ZIP	ZIP WATER HEATER
ELS	ELECTRIC SHOWER
P.O.U	POINT OF USE WATER HEATER

SMS ENVIRONMENTAL LTD	Quad One Becquerel Avenue Harwell Campus Didcot, Oxfordshire OX11 0RA sms-environmental.co.uk	BUILDING 2LS01712_(LEASED) COUNTRY HOUSE PROJECT: SCHEMATIC DRAWN: SMS - DG	DATE 16.12.25 JOB NUMBER 1262162	PAGE 1 OF 1	WHILST EVERY EFFORT HAS BEEN MADE TO IDENTIFY ALL PIPE WORK RUNS AND ASSOCIATED FITTINGS AND OUTLETS, SMS ENVIRONMENTAL LTD CANNOT GUARANTEE FULL ACCURACY OF THIS DRAWING. IT MAY NOT HAVE BEEN POSSIBLE TO VISUALLY INSPECT ALL SERVICES DUE TO THEIR LOCATION OR ACCESS LIMITATIONS THIS DRAWING HAS NOT BEEN COMPLETED TO SCALE	TEMPERATURE CHECK POINTS NEAREST & FURTHEST FROM THE CALORIFIER TEMPERATURE CHECK POINTS NEAREST & FURTHEST FROM CWST TEMPERATURE CHECK POINTS NEAREST & FURTHEST FROM INCOMING MAINS	ANY POINT OF USE HEATER (POU) MUST BE CHECKED MONTHLY & ALL OUTLETS SHOULD BE CHECKED THROUGHOUT THE YEAR MONTHLY TEMPERATURE CHECKS TO BE TAKEN FROM TESTING POINT OUTLETS ALONG WITH SOME TEMPERATURES FROM RANDOM OUTLETS EACH MONTH

SFT140_V2 GENERAL SCHEMATIC TEMPLATE