2CH00620_DOVEDALE AVENUE COMMUNITY CENTRE

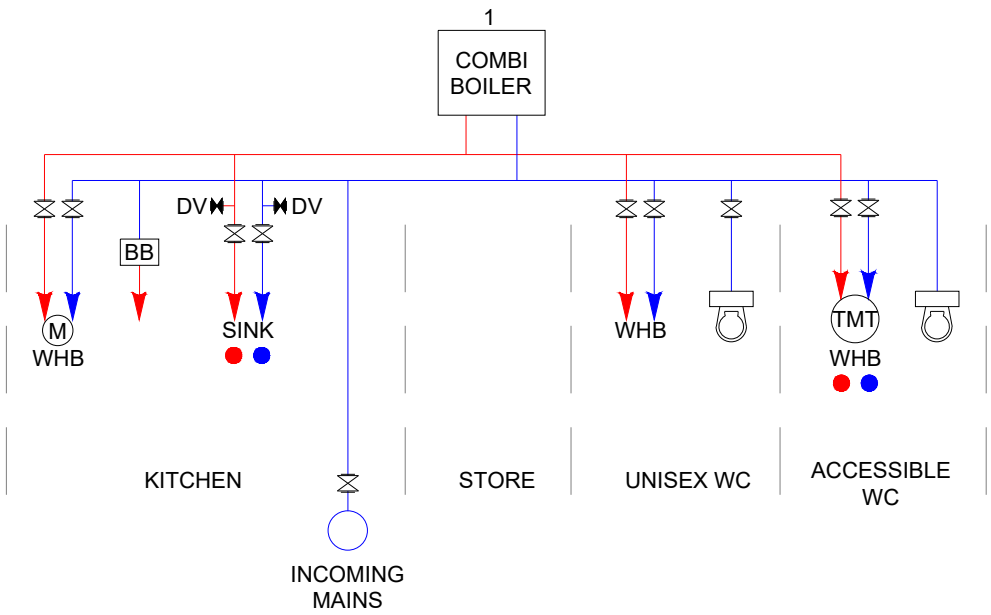

MAINS CWS SENTINELS

MAINS HWS SENTINELS

LEGEND

	MAINS FED CWS
	MAINS FED HWS
	MAINS/TANK FED WC'S
WHB	WASH HAND BASIN
M	MIXER TAP
TMT	THERMOSTATIC MIXER TAP
BB	BEVERAGE BOILER
	ISOLATION VALVES
	CLOSED VALVES
DV	DRAIN VALVE

SMS ENVIRONMENTAL Ltd	Quad One Becquerel Avenue Harwell Campus Didcot, Oxfordshire OX11 0RA sms-environmental.co.uk	BUILDING 2CH00620_DOVEDALE AVENUE COMMUNITY CENTRE		DATE 24.11.25	PAGE 1 OF 1	WHILST EVERY EFFORT HAS BEEN MADE TO IDENTIFY ALL PIPE WORK RUNS AND ASSOCIATED FITTINGS AND OUTLETS, SMS ENVIRONMENTAL LTD CANNOT GUARANTEE FULL ACCURACY OF THIS DRAWING. IT MAY NOT HAVE BEEN POSSIBLE TO VISUALLY INSPECT ALL SERVICES DUE TO THEIR LOCATION OR ACCESS LIMITATIONS THIS DRAWING HAS NOT BEEN COMPLETED TO SCALE	TEMPERATURE CHECK POINTS NEAREST & FURTHEST FROM THE CALORIFIER TEMPERATURE CHECK POINTS NEAREST & FURTHEST FROM CWST TEMPERATURE CHECK POINTS NEAREST & FURTHEST FROM INCOMING MAINS	ANY POINT OF USE HEATER (POU) MUST BE CHECKED MONTHLY & ALL OUTLETS SHOULD BE CHECKED THROUGHOUT THE YEAR MONTHLY TEMPERATURE CHECKS TO BE TAKEN FROM TESTING POINT OUTLETS ALONG WITH SOME TEMPERATURES FROM RANDOM OUTLETS EACH MONTH
		PROJECT SCHEMATIC	DRAWN SMS - SM	JOB NUMBER 1262158			